AMC-ANTGPSAP18X4-01

18 x 18 x 4mm GPS ceramic patch with a 3V single stage LNA, with 205mm of RG174 cable and a right angle SMB (f) connector.

Antenna (GPS Ceramic Patch)

1	Antenna model	1575R(18*18*4)
2	Frequency Range	1575.42MHz±1.02 MHz
3	V.S.W.R	1.5:1
4	Band Width	> 5 MHz
5	Impendence	50 ohm
6	Gain	2dBic Based on 7×7cm ground plane
7	Polarization	RHCP

LNA

1	Frequency Range	1575.42MHz±1.02 MHz
2	DC Voltage	3.0±0.5V
3	Gain (Typical)	28dB (Without cable +25℃±10℃)
4	Output VSWR (Typical)	1.5
5	Noise Figure (Typical)	1.3 (+25℃±10℃)
6	DC current (Typical)	10mA (At 3.0V)

Material

No	Part Name	SPEC
1	Antenna	Dielectric Ceramics
2	PCB	FR4
3	Shielding	Tinplate
4	RF Cable	RG174 ϕ2.8±0.2mm
		（L1=205±5mm）
5	RF Connector	SMB-KW3 (Right Angled)
6	Thickness	MAX 7.2mm

Environmental

1	Working Temp	-25℃~+65℃
2	Storage Temp	-40℃~+85℃
3	Vibration	Sine sweep 1g(0-p)
		10~55~10Hz each axis
4	Humidity	≤90%RH

Smith Chart (18x18mm Ground Plane)

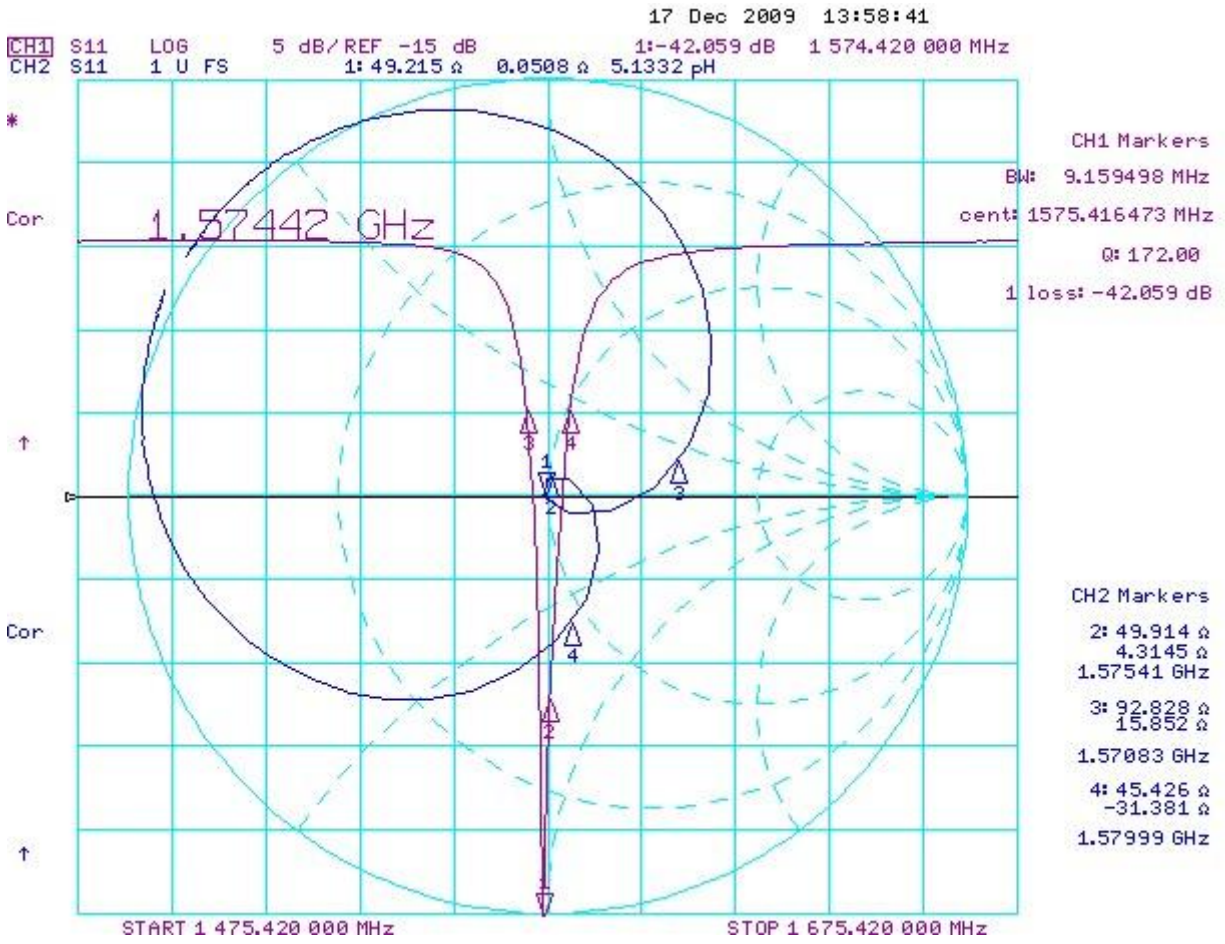

LNA Gain Plot (at 3V)

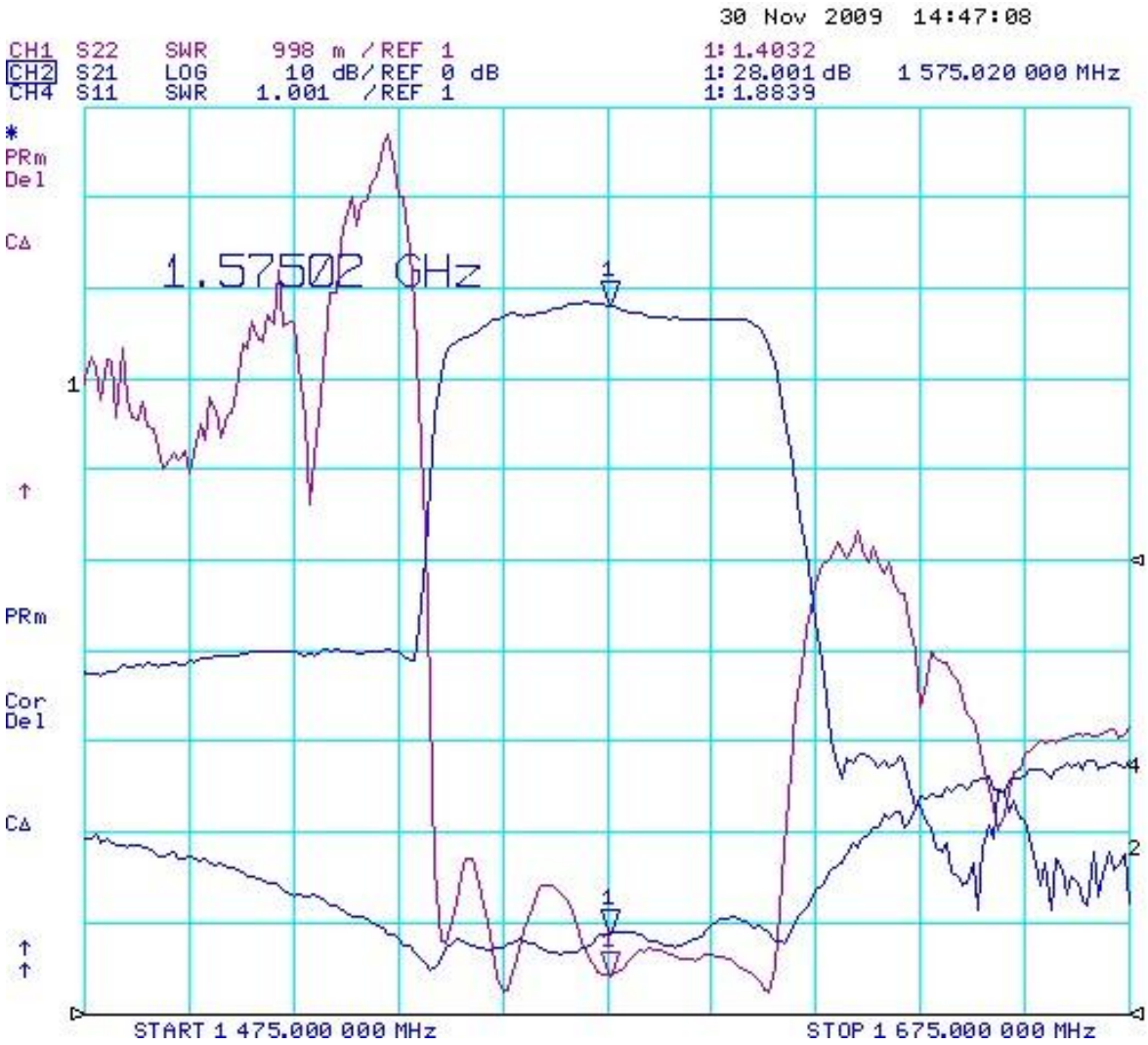

Polar Plot

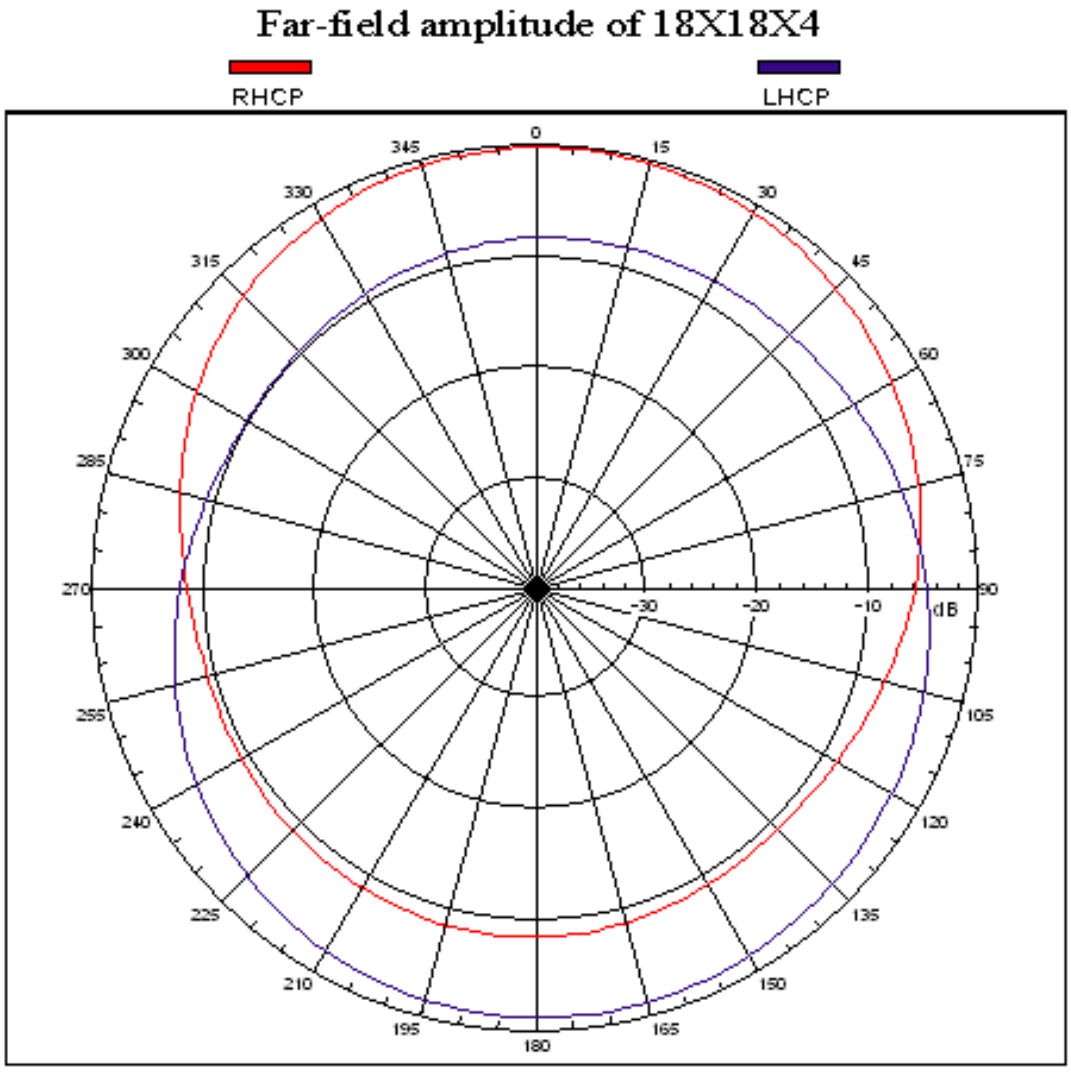

Far-field amplitude, RHCP, Tau = 0 deg
Gain = -0.31592 dBi
Max far-field (global) = -42.71381 dB, Max far-field (plot) = -42.71381 dB
Normalization: Reference, Network offset = 0.000 dB
Hpeak at: 3.99999 deg, Vpeak at: 0.000 deg
Plot centering: On
Far-field Cut Analysis:
  Avg value: -5.120 dB
  -3. dB beam width: 113.66 deg
  -6. dB beam width: 165.77 deg
  -10. dB beam width: Not Found
  Left Sidelobe: Not Found
  Right Sidelobe: Not Found
Selected beam(s) 1 of 31

Beam	Frequency	Azimuth	Phi	Pol
16	1.575 GHz	Azimuth	Phi	Dual-pol

Mechanical Structure and Layout

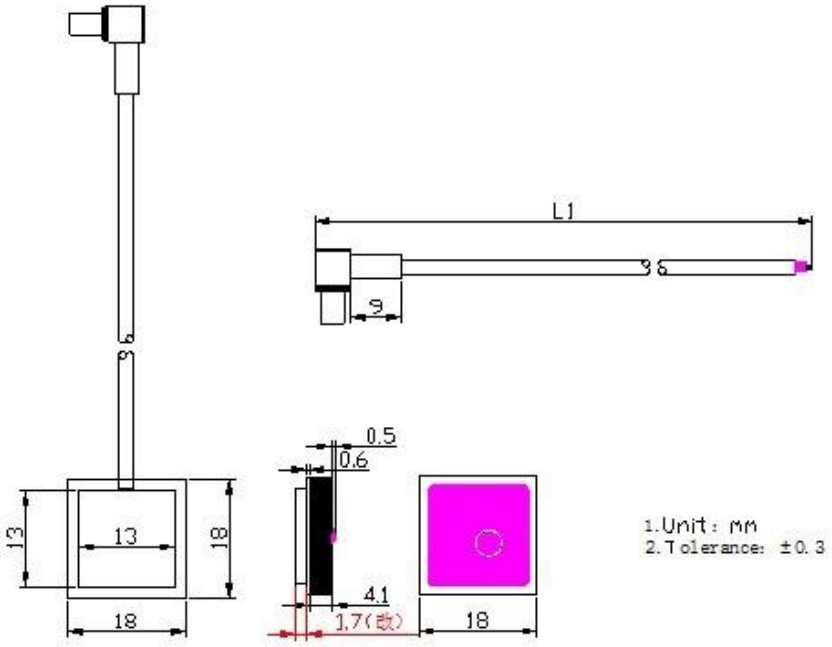

Connector Detail

(SMB-KW3)

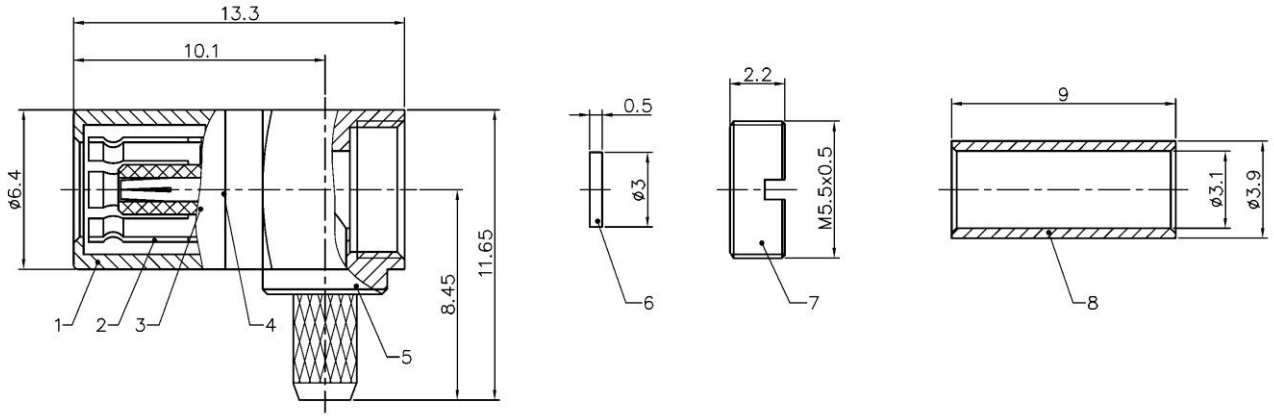

Packaging

1 piece GPS antenna module in a poly bag. 100 of these bags per layer. 2 layers per carton
200 pieces per carton (470x420x140mm)

QA Test Report
Code.QG/ZY 0.3.023-03B0
NO.20090311-001

LAB TEST DATA

Material Name: AMC-ANTGPSAP18X4
Test reason:
Verify AMC-ANTGPSAP18X4 adaptability to environment (low) temperature (PP verified)
Test conditions (standard):
1 using the GDS-225 high and low temperature work box
2 references GB2423.01 low temperature experimental methods, "Active antenna performance and environmental adaptability of the experiment work flow" " AMC-ANTGPSAP18X4 specifications"
3 low-temperature storage -40 ℃, placing 16H, resumed after the test at room temperature
4 (1) appearance of no change in (2) ΔS21 not more than 2.0dB (3) ΔS22 not more than 0.2 (4) ΔI less than 1.0mA

Material Name: AMC-ANTGPSAP18X4
Test reason:
Verify AMC-ANTGPSAP18X4 adaptability to environment (high) temperature (PP verified)
Test conditions (standard):
1 using the GDS-225 high and low temperature work box
2 references GB2423.02 temperature experimental methods, "Active antenna performance and environmental adaptability of the experiment work flow" " AMC-ANTGPSAP18X4 specifications"
3 High Temperature Storage 85 ℃, placing 16H, resumed after the test at room temperature
4 (1) appearance of no change in (2) ΔS21 not more than 2.0dB (3) ΔS22 not more than 0.2 (4) ΔI less than 1.0mA

Material Name: AMC-ANTGPSAP18X4
Test reason:
Verify AMC-ANTGPSAP18X4 adaptability to environment hot and humid (PP verified)
Test conditions (standard):
1 using the GDS-225 high and low temperature work box
2 references GB2423. Humid experimental methods, "Active antenna performance and environmental adaptability of the experiment work flow" " AMC-ANTGPSAP18X4 specifications"
3 at a temperature of 40 ℃, 93 ± 2% RH constant temperature hot and humid box placed 48H, restored after the test 12H
4 (1) appearance of no change in (2) ΔS21 not more than 2.0dB (3) ΔS22 not more than 0.2 (4) ΔI less than 1.0mA

Material Name: AMC-ANTGPSAP18X4
Test reason:
Verify AMC-ANTGPSAP18X4 environmental adaptability vibration (PP verified)
Test conditions (standard):
1 using the HG-70A Vibrator
2 references GB2423. Vibration test methods, "Active antenna performance and environmental adaptability of the experiment work flow" " AMC-ANTGPSAP18X4 specifications"
3 shipping packaging, in the vibrational frequencies of 10 ~ 55 ~ 10HZ, amplitude 1.5mm, along the horizontal and vertical directions of vibration of 30min
4 ⑴ appearance of no change in ⑵ ΔS21 not more than 2.0dB ⑶ ΔS22 not more than 0.2 ⑷ ΔI less than 1.0mA

Material Name: AMC-ANTGPSAP18X4 (10PCS)
Test reason:
Verify AMC-ANTGPSAP18X4 environmental adaptability Drop (PP verified)
Test conditions (standard):
1 By manual drop
2 "Active antenna performance and environmental adaptability of laboratory procedures", " AMC-ANTGPSAP18X4 specifications"
3 test after 100CM height according to an arbitrary initial direction of the free fall on a wooden floor of three times
4 ⑴ appearance of no change in ⑵ ΔS21 not more than 2.0dB ⑶ ΔS22 not more than 0.2 ⑷ ΔI less than 1.0mA